AGH

AGH University of Science and Technology

API 670 Standard on to the vibration measurement

Machinery protection systems

About API 670

- Prior to the early 1970s, many critical machines either had no vibration instrumentation at all, or used less capable methods such as casing velocity measurements.
- By the mid-1970s, vibration instrumentation based on proximity probe measurements was gaining acceptance in industry and many users were beginning to receive machinery with proximity probes already installed. However, there was wide variation in the types and configurations of systems being supplied.
- The first edition appeared in June 1976 and covered radial vibration and axial position.

Mechanical equipment

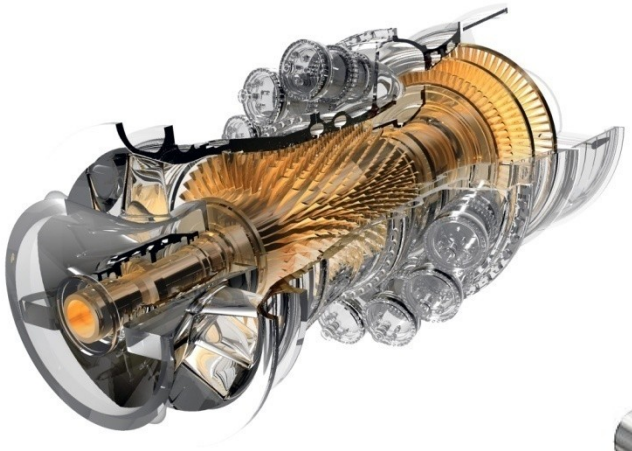

Gas turbines

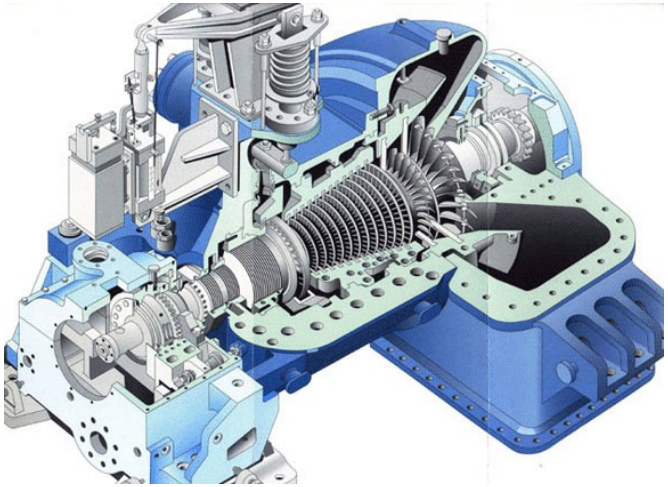

Steam turbines

Gears

Machinery Protection System

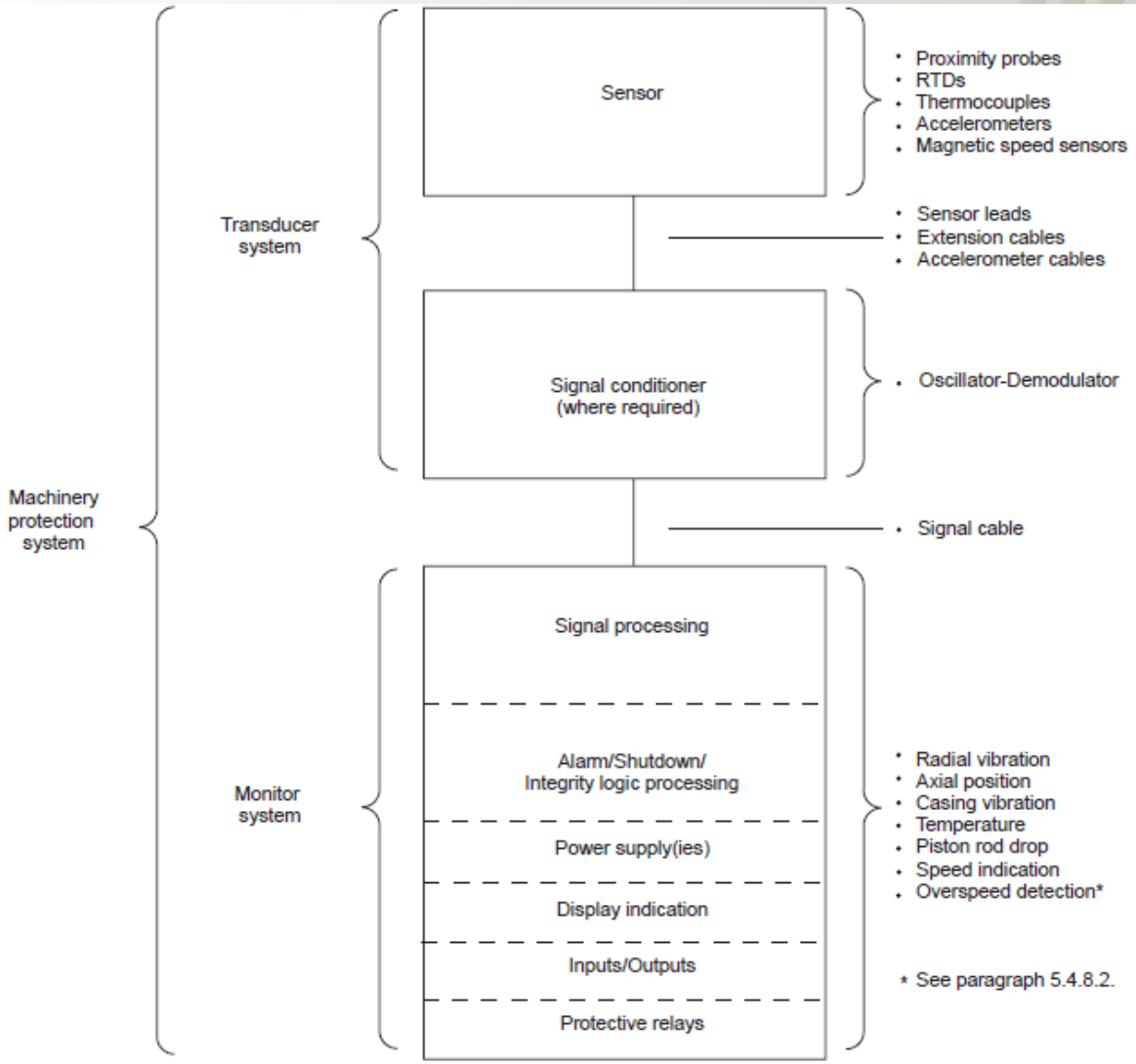

Transducer System

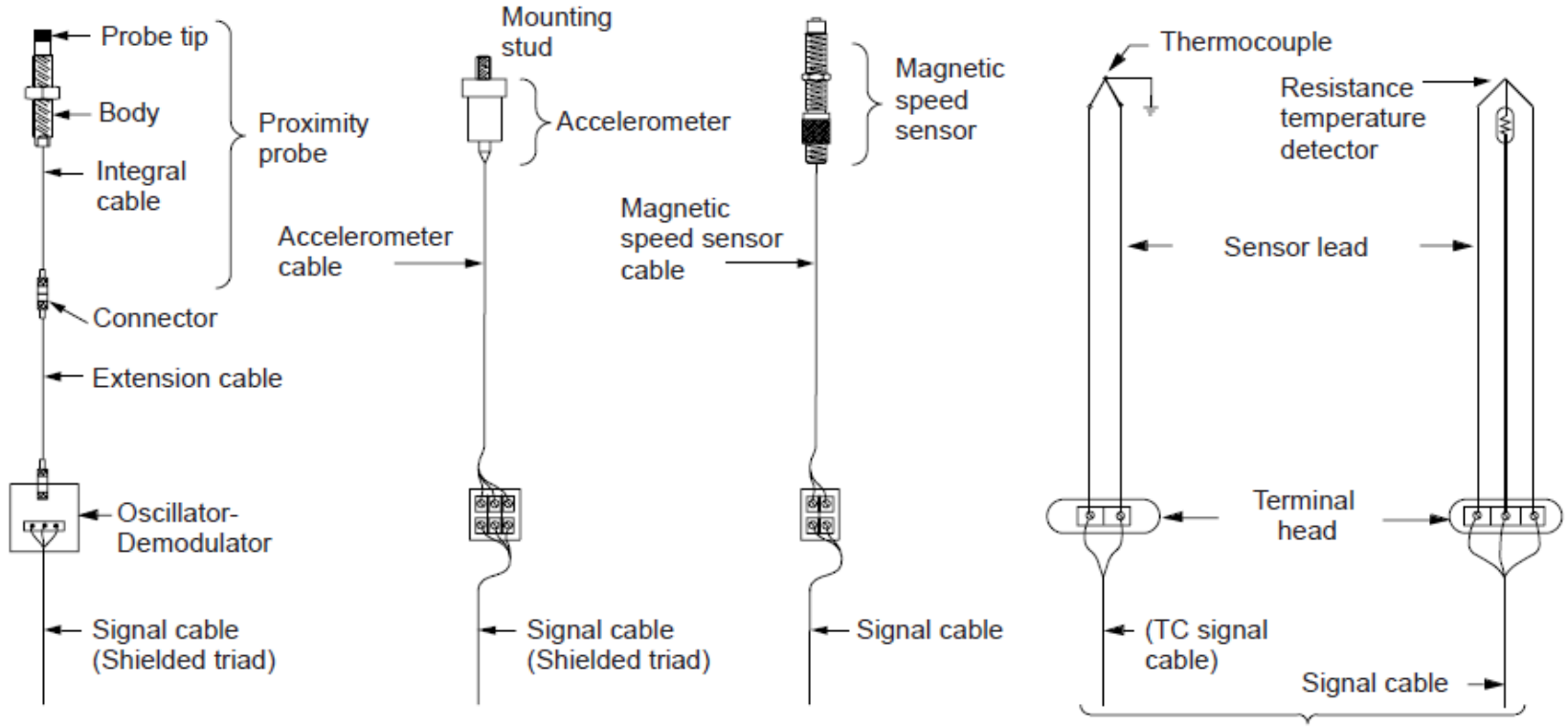

Proximity Probes
- Radial vibration
- Axial position
- Phase reference
- Piston rod drop
- Speed indication
- Overspeed detection (when specified)

Accelerometer
- Casing vibration

Magnetic Speed Sensor
- Speed indication
- Overspeed detection

Thermocouple and RTD Sensors
- Bearing temperature
- Motor winding temperature

Machinery Protection System Accuracy Requirements

Components	Temperature		Accuracy Requirements as a Function of Temperature	
	Testing Range	Operating Range	Within Testing Range	Outside Testing Range but Within Operating Range
Proximity probes	0°C to 45°C (32°F to 110°F)	–35°C to 120°C (–30°F to 250°F)	Incremental Scale Factor[1]: ± 5% of 7.87 mV/µm (200 mV/mil)	Incremental Scale Factor[1]: An additional ±5% of the testing range accuracy
Extension cables	0°C to 45°C (32°F to 110°F)	–35°C to 65°C (–30°F to 150°F)	Deviation from Straight Line[2]: within ±25.4 µm (±1 mil) of the best fit straight line at a slope of 7.87 mV/µm (200 mV/mil)	Deviation from Straight Line[2]: within ±76 µm (±3 mils) of the best fit straight line at a slope of 7.87 mV/µm (200 mV/mil)
Oscillator-demodulators	0°C to 45°C (32°F to 110°F)	–35°C to 65°C (–30°F to 150°F)	Minimum linear range: 2 mm (80 mils)	Minimum linear range: same as for testing range
Accelerometers and accelerometer extension cables[3]	20°C to 30°C (68°F to 86°F)	–55°C to 120°C (–65°F to 250°F)	Principal Axis Sensitivity: 100 mV/g ±5%	Principal Axis Sensitivity: 100 mV/g ±20%
			Amplitude Linearity: 1% from 0.1 g pk to 50 g's pk[4]	
			Frequency Response[5]: ±3 dB from 10 Hz to 10 kHz, referenced to the actual measured principal axis sensitivity[6].	
Temperature sensors and leads	0°C to 45°C (32°F to 110°F)	–35°C to 175°C (–30°F to 350°F)	±2°C (±4°F) over a measurement range from –20°C to 150°C (0°F to 300°F)	±3.7°C (±7°F) over a measurement range from –20°C to 150°C (0°F to 300°F)
Monitor system components for measuring:				
Radial Vibration, Axial Position, Piston Rod Drop, and Casing Vibration	0°C to 45°C (32°F to 110°F)	–20°C to 65°C (0°F to 150°F)	±1% of full scale range for the channel	Same as for testing range
Temperature			±1°C (±2°F)	Same as for testing range
Speed and Overspeed			±1% of alarm setpoint	Same as for testing range